Technical data

LEO 18 GTplus

TEUPEN ...access redefined since '77

PERFORMANCE

Working height, max.	18,30 m
Platform height, max.	16,30 m
Horizontal outreach, max. (200 kg)	8,50 m
Up and over clearance, max.	8,30 m
Platform capacitiy, max.	200 kg
Jib, movable	90 °
Turntable rotation, max.	355 °
To be jacked up on ground slope of	12,0 ° / 21,0 %
Track drive, height- and width-adjustable	8 / 16 cm
Gradeability, max.	19,7 ° / 35,5 %
Slope angle, max.	16,7 ° / 30,0 %
Travel speed, max.	1,8 km/h

MEASUREMENTS*

Platform (height) **(A)**	1,10 m
Platform (length) **(B)**	1,40 m
Platform (width) **(C)**	0,70 m
Length **(D)**	5,20 m
Length without platform **(E)**	4,50 m
Height **(F)**	1,99 m
Width, min. **(G)**	0,78 m
Ground clearance, max. **(H)**	0,25 m
Track (length x width) **(I)**	1,45 x 0,20 m
Outrigger footprint (length) **(J)**	3,31 m
Outrigger footprint (width) **(K)**	3,03 m
Outrigger plate Ø	0,18 m

WEIGHT*

Total weight	2650 kg
Live load in travelling position	5,28 kN/m²
Live load in working position	3,13 kN/m²
Point load per outrigger plate, max.	17,30 kN

POWER SOURCES

Standard power sources:	
■ Electric motor	(country-specific 1-phase)
■ Combustion engine (petrol)	Vanguard OHV 16HP (11,93 kW / 16,0 hp)
Optional power source:	
■ Combustion engine (Diesel)	Kubota Z602 (10,8 kW / 14,5 hp)
■ Battery drive (AGM)	48 V
Fuel tank capacity (petrol engine)	12,0 l
Fuel tank capacity (Diesel engine)	12,0 l

POWER SUPPLY

Electric current, max.	country-specific, on request

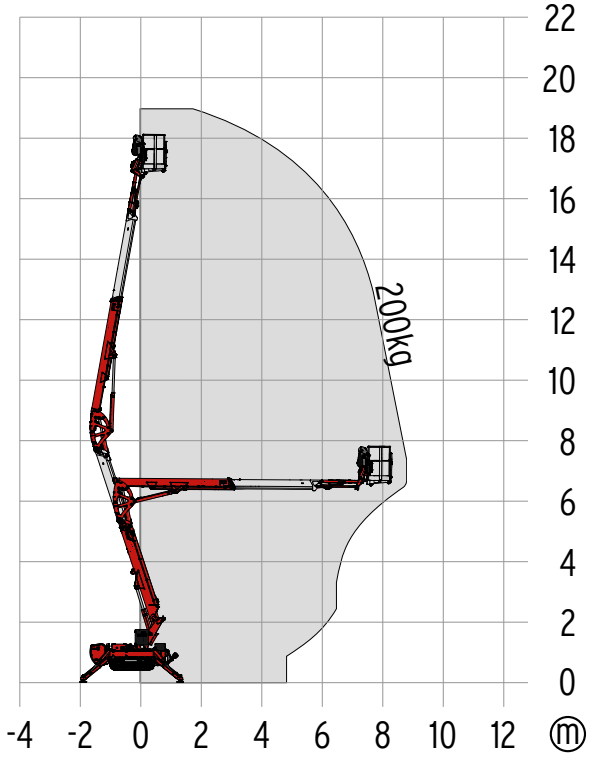

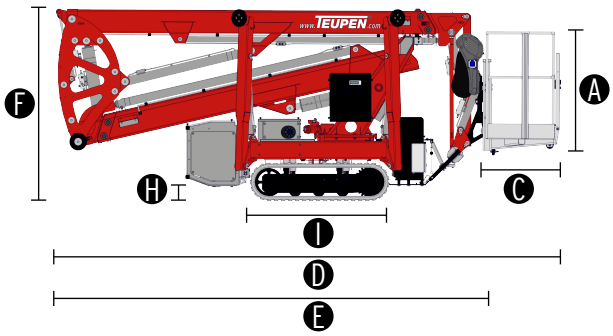

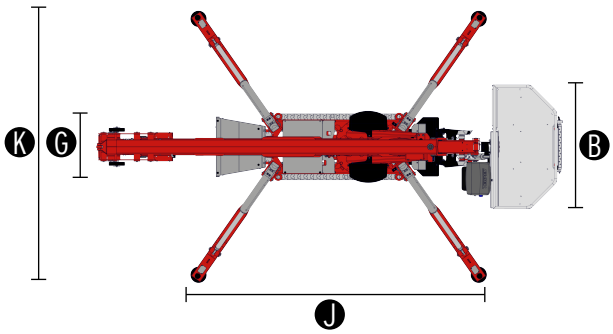

STANDARDS

Harmonised standard DIN EN 280:2016

The technical data may deviate +/- 3 % from the specified values.
* Weight and dimensions may vary depending on options and accessories.

Equipment

LEO 18 GTplus

TEUPEN ...access redefined since '77

CHASSIS

- Powerful track drive with hydraulic braking system
- Precise manoeuvring via sensitive remote control
- Indoor non-marking rubber tracks, with less tread depth the profile enables smooth travelling
- Hydraulically height- and width-adjustable crawler track drive

STABILISATION

- Electrohydraulic stabilisation with automatic levelling and ground pressure sensor system
- Wear resistent, ant-friction outrigger pads

BOOM SYSTEM

- Telescopic lower and upper boom
- All functions available via radio remote control
- Robust, lockable control panel

POWER SOURCE

- Electric motor (country-specific 1-phase)
- Petrol engine Vanguard OHV 16HP (11,93 kW / 16,0 hp)
- Start-stop device for combustion engine in the platform

PRODUCTIVITY, SAFETY, QUALITY

- Hydraulic emergency lowering via hand pump
- Power socket in the platform (country-specific 1-phase)
- Detachable platform, including attachement point for safety harnesses
- Drive operation without platform possible
- Protected, internal power track for platform control
- Impact resistant cover over control box and control panel
- Hydraulic system filled with biodegradable hydraulic oil
- High-quality paint in RAL 3020 (red)
  - Hydraulic cylinders in RAL 9006 (white aluminium)
  - Engine unit & component support in RAL 9006 (white aluminium)
- Unlockable check valves located directly on hydraulic cylinders
- Hydraulic system protected by pressure relief valves
- Solid base frame with full-length forklift pockets
- Hour meter

OPTIONS*

- Diesel engine Kubota Z602 (10,8 kW / 14,5 hp)
- Battery drive (AGM) 48 V including charging device
- Custom paintwork, one colour, according to RAL scheme
  - (except metallic coatings, signal- or special colours)
- Custom paintwork, two colours, according to RAL scheme
  - (except metallic coatings, signal- or special colours)
- Indoor non-marking rubber tracks, with less tread depth the profile enables smooth travelling

ACCESSORIES*

- Safety harness
- 4 sliding pads (700 x 220 x 60 mm)
- Track mat (2000 x 800 x 15 mm)
- 2 protective track covers made of high-quality polypropylene fabric
- Lifting device (200 kg capacity)
- Tree package light - 4 covers, piston rod (outrigger)
- Tree package, including
  - Guard plate over cover (hydraulic tank)
  - Guard plate over cover (turntable)
- 2 LED headlights (combustion engine)
- 2 LED headlights (battery drive)
- TOP level 1

TRAILER

- Tandem low platform trailer (steel), including ramps
  - Maximum permissible weight (3,5 t)
  - Net weight (630 kg)
  - Payload (2870 kg)

CONTACT

TEUPEN Maschinenbau GmbH
Marie-Curie-Str.13
48599 Gronau
Germany

Phone +49 2562 8161-0
Fax +49 2562 8161-888
E-mail mail@teupen.com

* Weight and dimensions may vary depending on options and accessories.

Product specifications are subject to change without notice or obligation. Photographs and drawings in this document are for illustrative purposes only. Refer to the appropriate Operator´s Manual for instructions on the proper use of this equipment. Failure to follow the appropriate Operator´s Manual when using our equipment or to otherwise act irresponsibly may result in serious injury or death. The only warranty applicable to our equipment is the standard written warranty applicable to the particular product and sale and we make no other warranty, expressed or implied. Products and services listed may be trademarks, service marks or trade-names of TEUPEN Maschinenbau GmbH and/or its subsidiaries in the U.S.A. and many other countries. "TEUPEN", "Access redefined" and "LEO Series" are registered Trademarks of Teupen GmbH in the United States of America and many other countries. © 2021 TEUPEN Maschinenbau GmbH.

2022-A_en